12~24VDC

SDC100W

100W Siren Amplifier

ECE R10

FEATURES

- Remote siren with small size is a ideal solution for space limited installation.
- Class D amplifier design for low current draw, clean sound output, higher efficiency and longer speaker lifespan.
- Programmable 11ohm or 8ohm output can operate with single 100W speaker or dual 50W speakers (4 ohm in series connection).
- Programmable tone group meets various country standards.
- “Record-n-Play” that records message and play instantly without using a memory card.
- Siren Interlock that disable siren activation without primary warning.
- Optional standard PA/Microphone.
- Short circuit, over/low voltage and overcurrent protection.
- Meet ECE R10 and CISPR 25.

SPECIFICATIONS

Compliance: ECE R10
Input Voltage: 12-24VDC
Siren Output Power: 100W
Output Load: 100W-ACR 11Ω
Siren Frequency: 373Hz- 1594Hz
Max. Current: 9.5A @ 12VDC / 4.5A @ 24VDC
Standby Current:
(w/o IGN wire) 2mA @ 12VDC / 3.5mA @ 24VDC
(w/ IGN wire) 0.3A @ 12VDC / 0.2A @ 24VDC
Operating Temp: -40°C to 65°C

I/O:
- +VDC,
- IGN (Ignition)
- Radio Re-Broadcasting,
- Radio Audio Input +-
- Horn Ring Transfer Input
- -GND,
- Siren Tone,
- Speaker Output+-
- Siren Interlock
- Day/Night Mode
- Record-n-Play

DIMENSIONS

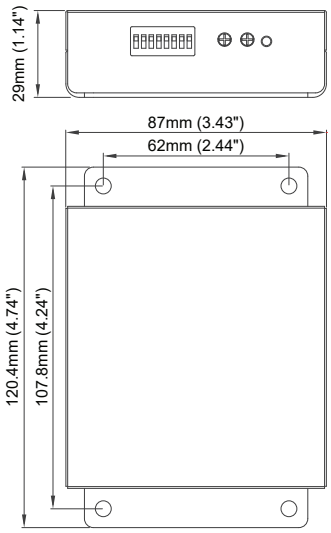

SELECTABLE TONE GROUP

No.	COUNTRY	TONE	FREQUENCY(Hz)	CYCLE/MINUTE
1	USA/ UK INTERNATIONAL	STANDARD 1	763 ~ 1594	WAIL 12 C/M
			763 ~ 1594	YELP 157 C/M
			450-598	TWO TONE 40 C/M
2	USA/ UK INTERNATIONAL	STANDARD 2	763 ~ 1594	WAIL 12 C/M
			763 ~ 1594	YELP 157 C/M
			450-598	TWO TONE 40 C/M
3	USA/ UK INTERNATIONAL	STANDARD 3	763 ~ 1594	WAIL 12 C/M
			763 ~ 1594	YELP 157 C/M
4	USA/ UK INTERNATIONAL	STANDARD 4	763 ~ 1594	WAIL 12 C/M
			763 ~ 1594	YELP 157 C/M
5	FRANCE	GENDAMERIE	434-729	TWO TONE 54 C/M
6	FRANCE	POLICE	434-581	TWO TONE 54 C/M
7	FRANCE	AMBULANCE	420-515-420	TWO TONE 30 C/M
8	FRANCE	POMPIERS	434-487	TWO TONE 27 C/M
9	FRANCE	UMH	434-649	TWO TONE 54 C/M
10	GERMANY	CITY (STADT)	432-574	TWO TONE 40 C/M
		COUNTRY (LAND)	362-483	TWO TONE 40 C/M
11	AUSTRIA	POLICE	431-574	TWO TONE 25 C/M
12	AUSTRIA	AMBULANCE	523-393	TWO TONE 17 C/M
13	AUSTRIA	FIRE BRIGADE	393-523	TWO TONE 17 C/M
14	AUSTRIA	MAGISTRATE	523-393	TWO TONE 18 C/M
15	ITALY	POLICE	465-621	TWO TONE 20 C/M
16	ITALY	AMBULANCE	392-657-392-657	TWO TONE 20 C/M
17	ITALY	AMBULANCE 2	763 ~ 1594	WAIL 12 C/M
			763 ~ 1594	YELP 157 C/M
			392-657-392-657	TWO TONE 20 C/M
18	NETHERLANDS	POLICE	373-501	TWO TONE 33 C/M TWO TONE 66 C/M

PART NO.

- **17010412** (R10_Amplifier Only)
- **17010429** (R10_Amplifier Only & Handheld Mic Set)

COMPATIBLE SPEAKER

- **JS100-C1 Compact Siren Speaker**

- **JS100-SP Compact Siren Speaker**

sales@cell2.com +44(0)2033 285 494